ಕರ್ನಾಟಕ ಶಾಲಾ ಪರೀಕ್ಷೆ ಮತ್ತು ಮೌಲ್ಯ ನಿರ್ಣಯ ಮಂಡಲಿ

ಮಲ್ಲೇಶ್ವರಂ, ಬೆಂಗಳೂರು – 560003

KARNATAKA SCHOOL EXAMINATION AND ASSESSMENT BOARD

MALLESHWARAM, BENGALURU- 560003

2026-27 ಎಸ್.ಎಸ್.ಎಲ್.ಸಿ ಮಾದರಿ ಪ್ರಶ್ನೆಪತ್ರಿಕೆ – 4

S.S.L.C. MODEL QUESTION PAPER- 4 2026-27

ವಿಷಯ : ಗಣಿತ

SUBJECT: MATHEMATICS

(ಇಂಗ್ಲಿಷ್ ಮಾಧ್ಯಮ/ ENGLISH MEDIUM)

ವಿಷಯ ಸಂಕ್ಷೇತ : 81-E	Subject Code : 81-E
ಸಮಯ: 3 ಗಂಟೆ 15 ನಿಮಿಷಗಳು	(Time: 3 Hours 15 Minutes)
ಗರಿಷ್ಠ ಅಂಕಗಳು : 80	(Max. Marks: 80)

General Instructions to the candidate:

1. This question paper consists of 38 questions.
2. Follow the instructions given against the questions.
3. Figures in the right-hand margin indicate maximum marks for the Questions.
4. The maximum time to answer the paper is given at the top of the question Paper It includes 15 minutes for reading the question paper

I. Four alternatives are given for each of the following questions / incomplete statements. Choose the correct alternative and write the complete answer along with its letter of alphabet. **$8 \times 1 = 8$**

1. The maximum number of zeroes of a quadratic polynomial is,

   (A) 4 (B) 1

   (C) 2 (D) 3

2. If the pair of linear equations $a_1x + b_1y + c_1 = 0$ and $a_2x + b_2y + c_2 = 0$ have infinite solutions, then the correct relation among the following is,

   (A) $\frac{a_1}{a_2} \neq \frac{b_1}{b_2}$ (B) $\frac{a_1}{a_2} = \frac{b_1}{b_2} = \frac{c_1}{c_2}$

   (C) $\frac{a_1}{a_2} \neq \frac{b_1}{b_2} = \frac{c_1}{c_2}$ (D) $\frac{a_1}{a_2} = \frac{b_1}{b_2} \neq \frac{c_1}{c_2}$

3. If one of the roots of the quadratic equation $2x^2 + ax + 6 = 0$ is 2, then the value of 'a' is

   (A) 7 (B) $\frac{7}{2}$

   (C) -7 (D) $\frac{-7}{2}$

4. The formula to find the sum of first ' n' natural numbers is,

   (A) $S_n = n(n+1)$ (B) $S_n = n^2$

   (C) $S_n = \frac{n(n+1)}{2}$ (D) $S_n = \frac{n(n-1)}{2}$

5. In the given figure, the value of 'x' is

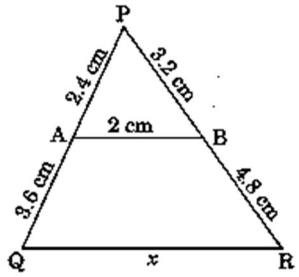

(A) 4 cm (B) 5 cm

(C) 6cm (D) 8 cm

6. The formula to find mean of the grouped data by direct method is

(A) $\bar{x} = \frac{\Sigma f_i}{\Sigma x_i}$ (B) $\bar{x} = \frac{\Sigma f_i x_i}{\Sigma x_i}$

(C) $\bar{x} = \frac{\Sigma f_i x_i}{\Sigma f_i}$ (D) $\bar{x} = \Sigma f_i x_i$

7. The volume of a cube with edge is 5 cm is

(A) 125 cm^2 (B) 30 cm^3

(C) 100 cm^3 (D) 125 cm^3

8. If $\sin A = \frac{1}{\sqrt{2}}$, then the value of A is,

(A) 30^0 (B) 45^0

(C) 90^0 (D) 60^0

II ANSWER THE FOLLOWING QUESTIONS : 8 X1 = 8

9. Write the number of zeroes of the polynomial p(x) in the given graph.

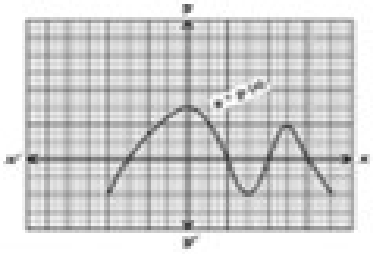

10. If the lines represented by the equations 12x + py + 8 = 0 and 4x + 2y + 2 = 0 are parallel, then find the value of 'p'.
11. In an arithmetic progression the sum of the first 4 terms is 20 and the sum of first 3 terms is 12, then find the 4th term of the progression.
12. In ΔABC, DE || AB. If CD = 3 cm, EC = 4 cm, BE = 6 cm, then find the measure of DA.
13. If the probability of winning a game is 0.8 then find the probability of losing the same game.
14. If a and b are prime numbers, then write their H.C.F.
15. Two diagonals of a parallelogram intersect at a point 'O'. If the coordinates of the end points of one of the diagonals are (1, 1) and (7, 4) then find the coordinates of the point 'O'.
16. Write the formula to find the surface area of a sphere whose radius is 'r' units.

III. Answer the following questions: **8 X 2 = 16**

17. There are 10 terms in an arithmetic progression. If the last term is 34 and common difference is 3, then find the first term of the progression.

OR

Find the number of terms in the arithmetic progression 7, 13, 19.....205

18. Determine the nature of the roots of the quadratic equation $x^2 - 9 = 0$

19. Solve the given pair of linear equations.

$5x - y = 14$

$x - y = -2$

20. Write the coordinates of the origin and also write the distance of the point D $(3, -4)$ from the x-axis.

21. Prove that $2 - \sqrt{5}$ is an irrational number.

22. A quadrilateral ABCD is drawn to circumscribe a circle. Prove that AB + CD = AD + BC

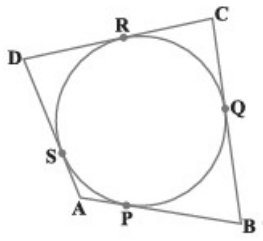

OR

Prove that the angle between the two tangents drawn from an external point to a circle is supplementary to the angle subtended by the line segments joining the points of contact at the centre.

23. Evaluate: $2\tan^2 45^0 + \cos^2 30^0 - \sin^2 60^0$

24. The length and breadth of a rectangular field are 147m and 56m respectively. Calculate the maximum length of a rod that can be used to measure both length and breadth exactly. How many times this rod has to be used to measure the length of the field?

IV. Answer the following questions: **9 x 3 = 27**

25. Write the quadratic polynomial whose sum of the zeroes is 2 and product of the zeroes is -15. Also and find the zeroes of this polynomial.

26. An umbrella has 8 ribs which are equally spaced . Assuming umbrella to be a flat circle of radius 45 cm, find the area between the two consecutive ribs of the umbrella.



OR

A car has two wipers which do not overlap. Each wiper has a blade of length 25 cm sweeping through an angle of 115°. Find the total area cleaned at each sweep of the blades.

27. In the figure, ABCD is a parallelogram. If point P divides AB in the ratio 2:3 and the point Q divides DC in the ratio 4 : 1, then prove that $OA = 2 \times OC$.

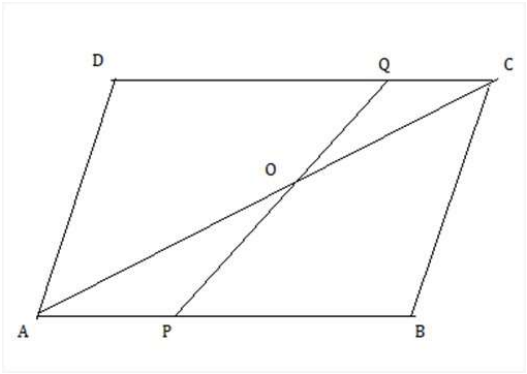

OR

In the trapezium ABCD, AB || DC. Diagonals AC and BD intersect each other at the point O. Prove that $AO \cdot DO = CO \cdot BO$

28. Prove that, "The tangent at any point of a circle is perpendicular to the radius through the point of contact."

29. A game consists of tossing a coin three times and noting its outcome each time. Person 'A' wins if all the tosses give the same result and loses otherwise. Person 'B' wins if the outcome is at least two heads and loses otherwise. Calculate which person has the greater probability of losing the game.

30. Aniruddha bought some pens for ₹60. If he had bought 5 more pens for the same amount, the price of each pen would have been reduced by ₹1. Find the number of pens he bought and the price of each pen.

31. In the figure, find the coordinates of the point which divides the line segment 'AB' internally in the ratio 1:2 using section formula.

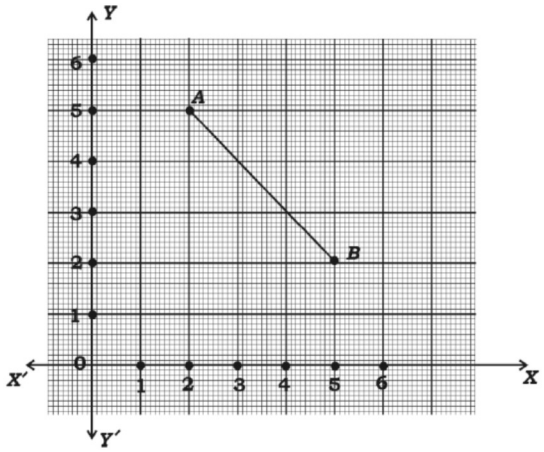

32. Find the Mode for the following frequency distribution table.

class interval	10 -20	20 -30	30 -40	40 -50	50 - 60
frequency	3	9	6	7	5

OR

Find the Median for the following frequency distribution table.

class interval	frequency
0 – 10	4
10 – 20	9
20 – 30	15
30 – 40	14
40 – 50	8

33. Prove that: $\frac{1+\cos A}{\sin A} - \frac{\sin A}{1+\cos A} = 2\cot A$

OR

Prove that: $(cosecA - sinA)(tanA + cotA) = cotA.cosecA$

V. Answer the following questions : **4 X 4 = 16**

34. Prove that "If one angle of a triangle is equal to one angle of the other triangle and the sides including these angles are proportional, then the two triangles are similar".

OR

Prove that "If in two triangles, corresponding angles are equal, then their corresponding sides are in the same ratio (or in proportion) and hence the two triangles are similar".

35. The sum of first 5 terms of an arithmetic progression is 70 and the sum of first 10 terms is 290. Find the progression. Find which term of this progression is 48 more than its 10th term.

36. Solve the given pair of linear equations by graphical method.

$x + 3y = 11$

$x + y = 5$

37. Two poles of height 1.5m are standing vertically on either side of a flag post on a level ground as shown in the figure. The height of the flag post is $7\sqrt{3}$m and the angle of elevation from the foot of the pole AB to the top of the flag post is 30^0 and angle of elevation from the top of pole CD to the top of the flag post is 45^0. Find the distance between the poles. ($take\ \sqrt{3}$=1.7)

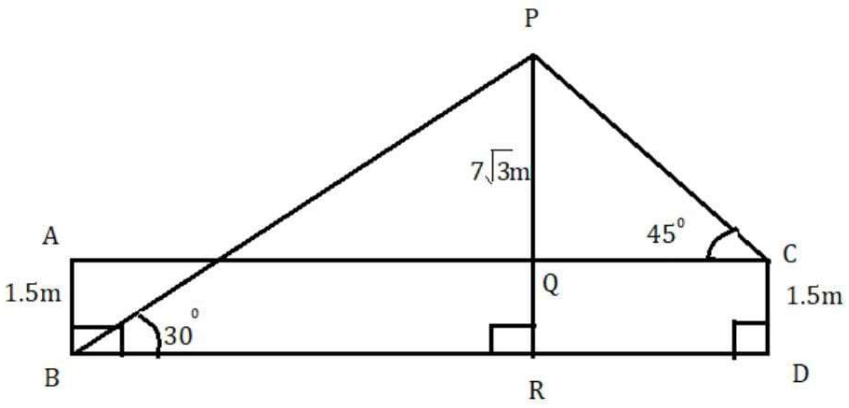

OR

A building(AB) and a lamp post (CD) are standing vertically on a level ground as shown in the figure. The angles of depression of the top and bottom of the lamp post from the top of the building are found to be 30^0 and 60^0 respectively. If the height of the building is 60m, then find the

(i) distance between the building and lamp post

(ii) height of the lamp post.

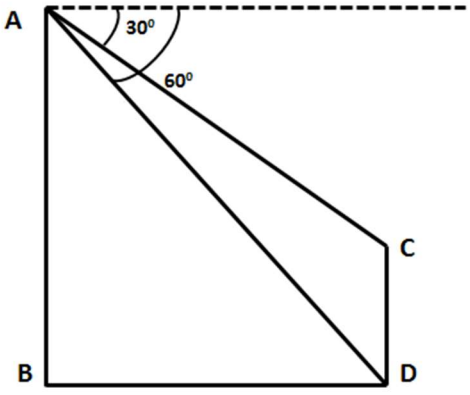

VI. Answer the following questions: **1 X 5 = 5**

38. A solid is made by joining a cone and a hemisphere on either sides of a cylinder with the same radius as that of the cylinder as shown in the figure. The height of the cylinder and the cone are 30cm and 24cm respectively. If the volume of the cylinder is $4620cm^3$, then find the total surface area of the solid.

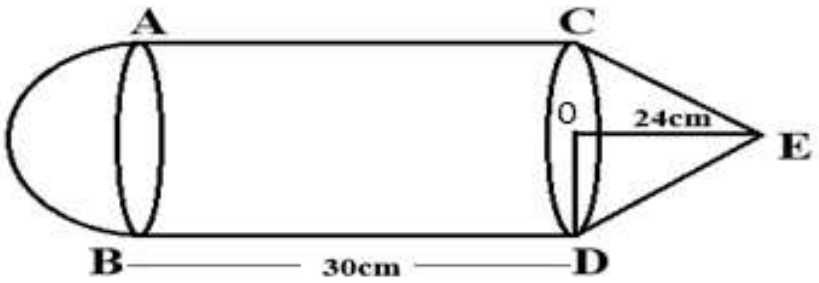

OR

Sanvi made a solid as shown in the figure. The total height of the solid is 14cm and the diameter of the hemisphere and cone is 12cm. Find the total surface area and volume of the solid.

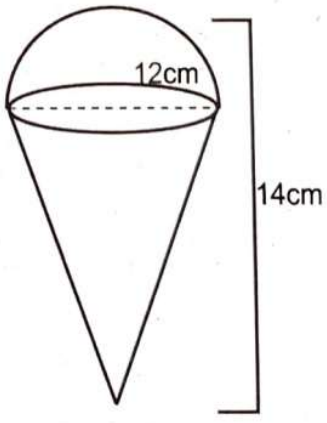

****